VOLVO

Service Manual

Fault tracing
Design
Repair
Function
Maintenance

Section 8 (85-88)

Climate control and interior trim

960/S90
Executive 1996-

TP 8716031

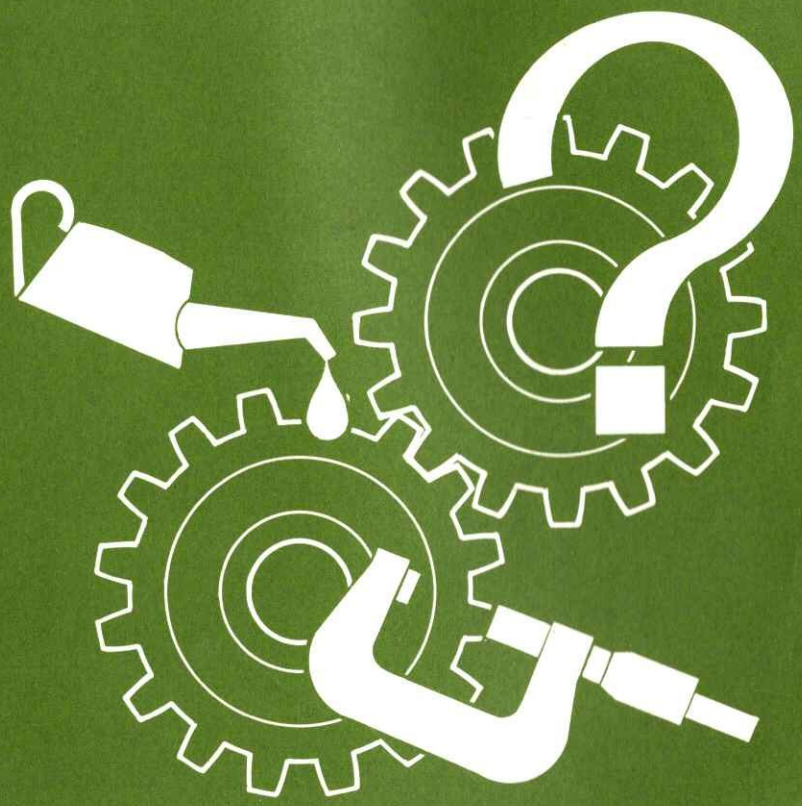

Volvo Car Corporation

Cars with SRS/SIPS airbags (700/900)

Warning! Cars equipped with a Supplemental Restraint System (SRS)/Side Impact Protection (SIPS) bags must be treated carefully when repairs are being carried out. This is to help prevent:
1. Injuries when carrying out a repair.
2. Damage or malfunction of the SRS/SIPS system.

Work on the SRS/SIPS systems or related component must be carried out by an authorised Volvo workshop.
Refer to the appropriate SRS/SIPS Service Manuals for complete system information.

Is the car equipped with SRS/SIPS?

Cars with SRS are most easily recognised by the letters SRS on the steering wheel pad. If the car also has an with an air-bag on the passenger side, the letters 'SRS' will be embossed on the dashboard above the glove compartment.

Most cars with SRS also have with pyrotechnical seat belt tensioners in the B-pillars.

SIPS bags are only installed in cars equipped with SRS systems from 1996. There is a SIPS identifying label is attached to the windshield and on decal on the windshield and on the side panels of the front seats.

700 series 1987-1988 year models

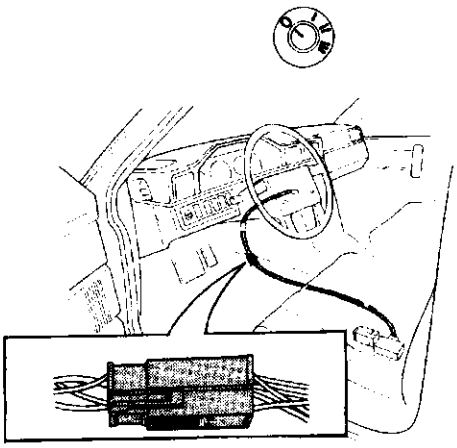

S146912

Always disconnect the yellow SRS connector (see fig.) when fault tracing electrical/electronic systems or when welding.
Important: The ignition must be turned off (position "0") when disconnecting/connecting the SRS connector. (It is not necessary to disconnect the connector on other year models.)

Dashboard or around steering column cover

Take care not trap, fray or pierce SRS wiring when working on the soundproofing panel, knee bolster, ignition switch, steering column covers, glove compartment, dashboard, door sills and B-pillars.

Driver's seat, centre console or driverïs side carpeting carpeting.

The SRS collision sensor is located under the left front seat.

Never install accessories on or near the sensor.

The crash sensor connector on 1992 and earlier models must **never** be disconnected.

Repairs to steering gear and front suspension

When carrying out repairs to the steering wheel, steering column or steering gear always follow the repair procedures in the appropriate SRS Service Manual.

Read the relevant section! The contact reel in the steering column will be damaged if the steering wheel is turned more than three turns in either direction.

Modifications to February 1997 included
Modifications introduced after the above date are not covered in this manual.
See Service Bulletins as applicable.

Volvos are sold in versions adapted for different markets. These adaptions depend on many factors including legal, taxation and market requirements. This manual may therefore show illustrations and text which do not apply to cars in your country.

© Volvo Car Corporation

Seats

The SIPS sensor is located in the centre of the side panels of the front seats.

The SIPS bag can be activated by a blow or pressure to the side panel or if an object is caught between the side panel and the door when the door is closed.

Test terminal

-1992: An unused terminal in the fusebox is used as an SRS diagnostics test terminal. Do not install a fuse or connect an accessory to this terminal.

1993-1995: Data link connector (DLC) B in the engine compartment is used.

1996-: Data link connector (DLC) in passenger compartment.

Contents

Group 85 Interior trim 2
AA. Rear work lighting, Executive 2
AB. Rear center console, Executive 3
AC. Executive rear seat 6

Group 87 Climate control 17
AD. Rear climate control unit and coolbox, Executive 17
ADA. Rear climate control unit 17
ADB. Rear coolbox 28

Group 88 Interior trim 29
AE. Electrical sun blind, Executive 29

The following levels of observations, cautions and warnings are used in this Service Documentation:

Warning! Describes a situation, action or event where care is required to avoid personal injury.

Caution! Describes a situation, action or event where care is required to avoid damage to a product.

Note! Describes a situation, action or event where a recommendation is made that will enable a repair to be correctly carried out. No personal injury or damage to a product.

Hint: Describes an event which can be of interest for the reader for the purpose of training or greater understanding of the operation involved.

Order No.: TP 8716031

We reserve the right to make alterations without prior notification.

Group 85 Interior trim

AA. Rear work lighting, Executive

AA A. Rear work lighting

AA A1

Rear work lighting

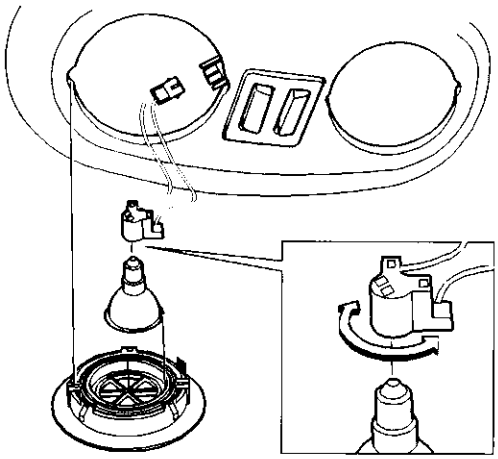

A3500792

Removing

Remove lighting using a weatherstrip tool.
Pull out cable and disconnect.

Replacing bulb with reflector:

Remove bulb contact by twisting it counter-clockwise and pulling it straight out.
Remove reflector with bulb.

Installing

Position the reflector with bulb on the bulb holder.
Note guide channel.
Install bulb contact.
Connect the connector.
Install lighting in headlining.

Note! Tracks for lighting in headlining.

AA A2

Switch

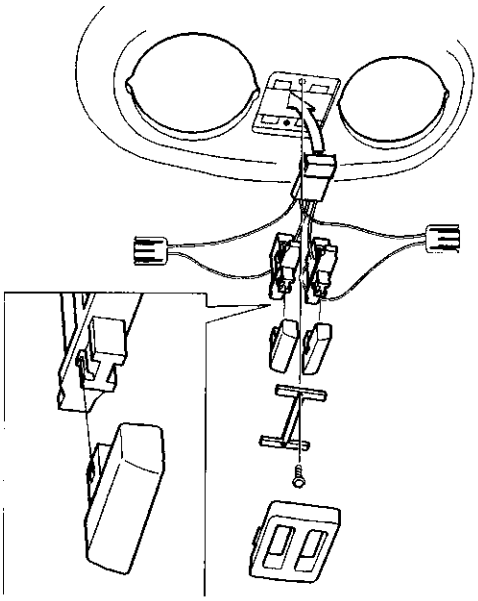

A3500793

Removing

Carefully remove cover using a weatherstrip tool.
Remove screws and holder.
Remove switches and disconnect the connectors.

Installing

Note! Positioning of left and right switches.

Install in reverse order.

AB. Rear center console, Executive

AB A. Rear center console

AB A1

Cover

Removing

Remove front armrest.

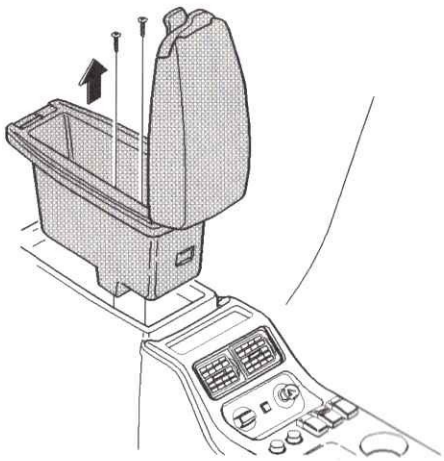

A8501695

Remove panel from rear center console.
Disconnect air duct.
Disconnect connectors.
Remove panel.

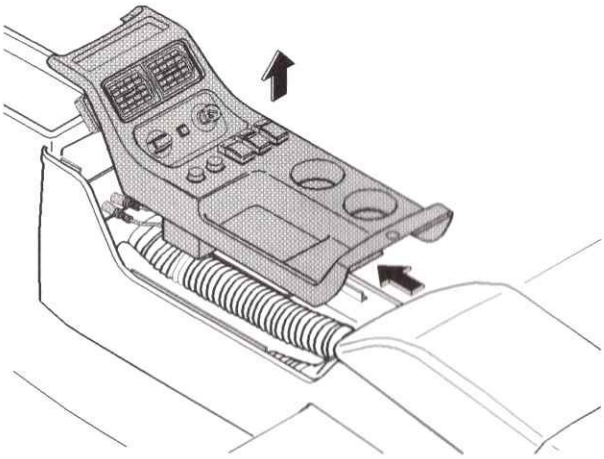

A8501696

AB A2

Center console

Remove:

- panel according to **AB A1**.
- backrest and seat cushions according to AC A. *Replacing rear seat seat cushion/backrest cushion and center console* page 6.
- rear center console mounting screws.
- screws on inside.
- bracket.

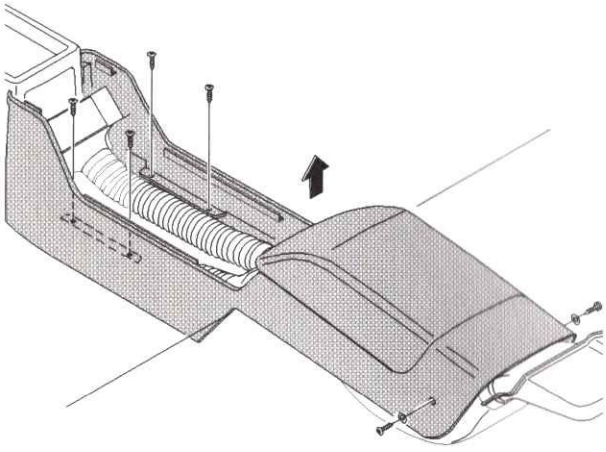

A8501697

AB A3

Vent on rear center console

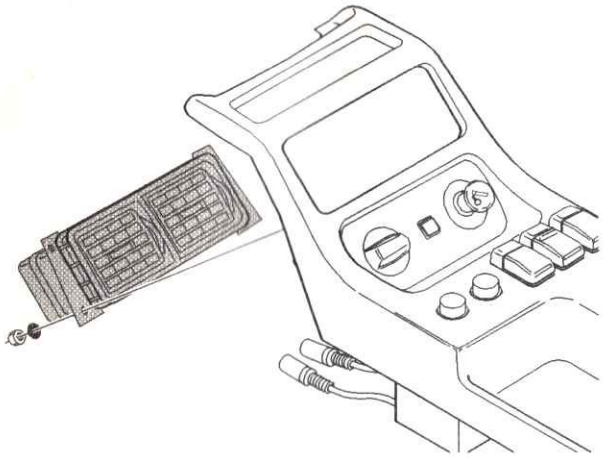
A8501698

Removing

Remove:

- panel according to **AB A1**.
- nuts and washers.
- vent.

AB A4

Rear climate control unit control panel, control/cigarette lighter lighting bulb

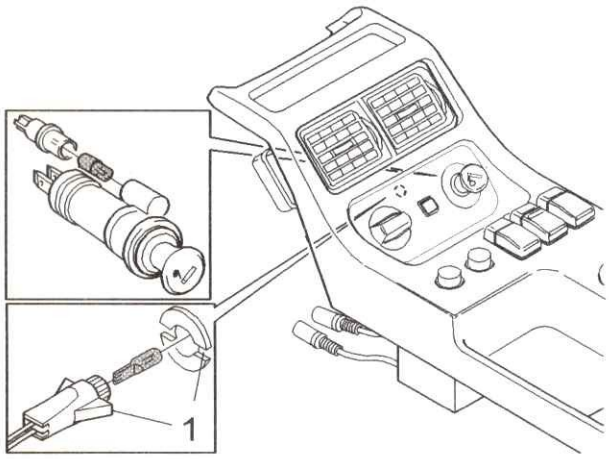

A8501703

Replacing rear climate control unit control/cigarette lighter lighting bulb

Remove:

- panel according to **AB A1**.
- bulb holder.
- bulb.

Note! Guide channel (1) for bulb holder.

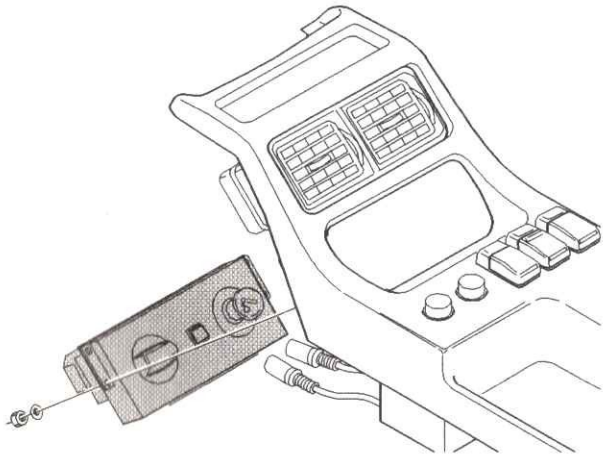
A8501699

Replacing control panel

Remove:

- nuts and washers.
- control.

AB A5

Rear sound balance control

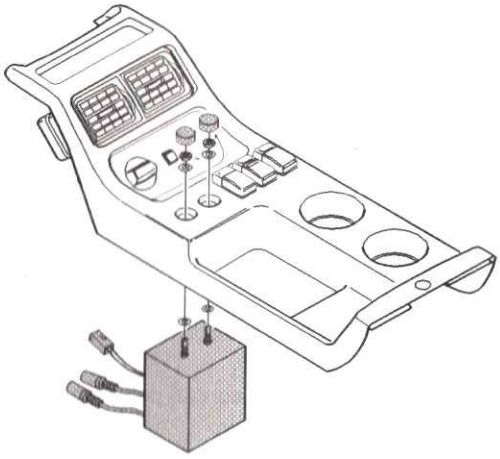
A3901667

Remove:

- panel according to **AB A1**.
- buttons using a weatherstrip tool.
- nuts and washers.
- control.

AB A6

Switch

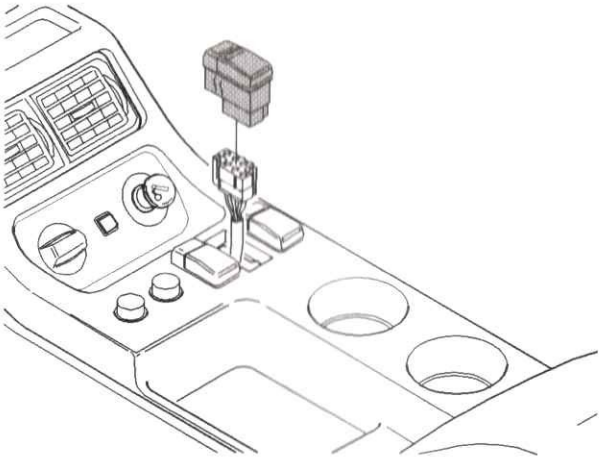
A8501694

Carefully remove switch using a weatherstrip tool.
Disconnect switch connector.

AC. Executive rear seat

AC A. Replacing rear seat seat cushion/backrest cushion and center console

Removing seat cushion/backrest cushion

AC A1

Removing seat cushion

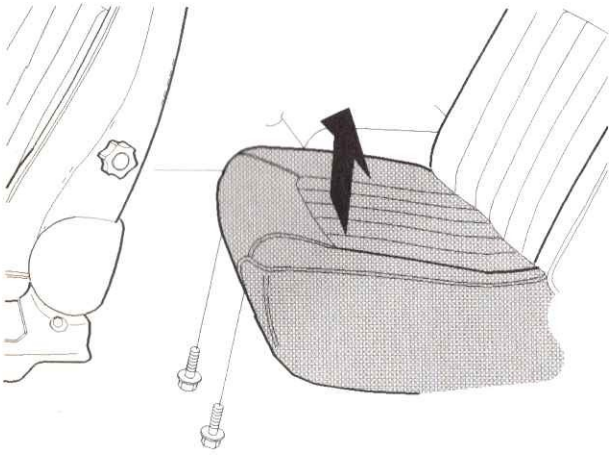

A8501057

Move the seat cushion as far forward as possible.
Raise the seat cushion as far as possible.
Remove the two screws (M6) in the front edge of the seat.
Lift up the seat cushion to release it from the locating pins.
Disconnect heated seat and control panel connectors.
Remove seat cushion from car.

AC A2

Installing seat cushion

In reverse order.

Tightening torques for screws = 8 Nm.

AC A3

Removing backrest cushion

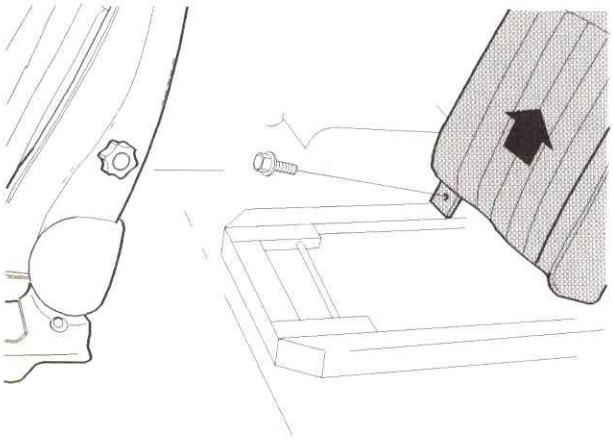

A8501058

Remove seat cushion according to **AC A1**.
Remove two screws (M6) in the lower edge of the backrest cushion.
Remove seat belt anchorage screw (M16) from the seat frame.

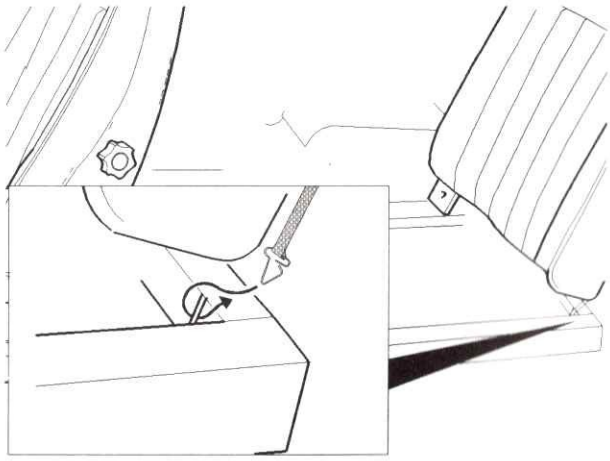

A8501062

Unhook the two hooks on the left and right-hand sides.
Disconnect connector.
Press up and lift off backrest cushion.

AC A4

Installing backrest cushion

In reverse order.

Use a new M16 screw for the seat-belt anchorage.

Tightening torques = 40 Nm

Tightening torques for backrest screws = 8 Nm.

AC A5

Removing center console

Note! The following section "Removing center console" only applies to cars with equipment level 2 (with a short rear center console and Separate rear seats).

S8501221

Remove control panel by pressing a weatherstrip tool between the control panel and trim.

Note! The weatherstrip tool should be pressed down as illustrated.

Disconnect control panel connectors.

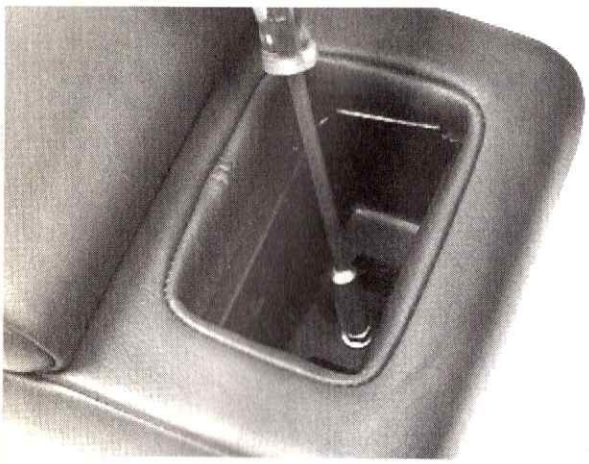

S8501220

Remove one screw (M6) under control panel.

Remove two screws (M6) at the rear edge on the back plate.

Remove center console.

AC A6

Installing center console

Route wiring.

Secure armrest. Screw into place.

Press connector into control panel.

Press control panel down into center console.

AC B. Replacing seat cushion upholstery and heater pad

Replacing seat cushion upholstery and heater pad

AC B1

Removing Velcro strip

Place seat cushion on a workbench.
Undo Velcro strips.

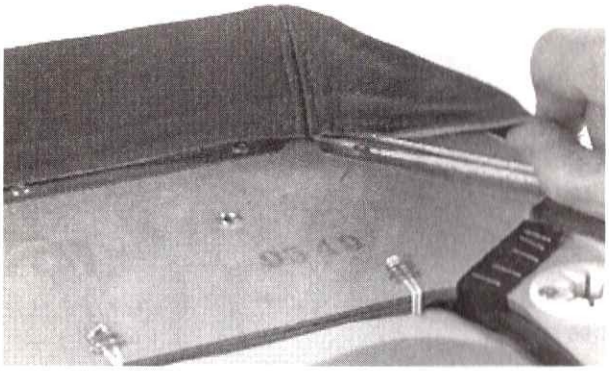

S8501229

AC B2

Removing staples and clamps

Cut off staples.

S8501233

Remove retaining clip holding upholstery.

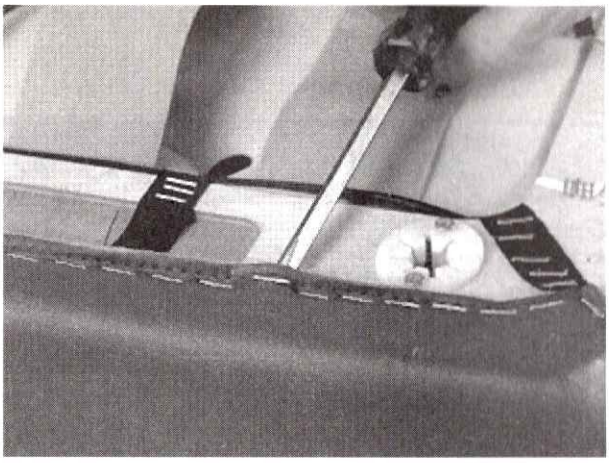

S8501232

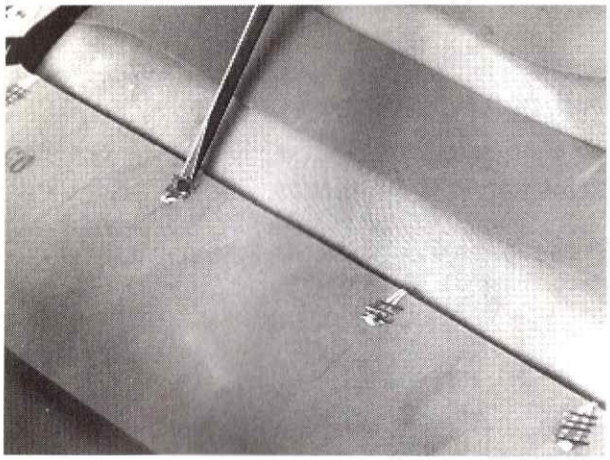

S8501230

Remove retaining clip holding retaining strap.

AC B3

Removing control panel

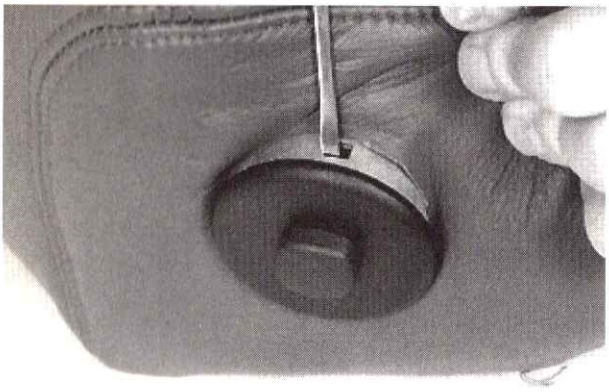

S8501228

Carefully press control panel put of sleeve.
Use a screwdriver.

AC B4

Remove upholstery from wooden frame

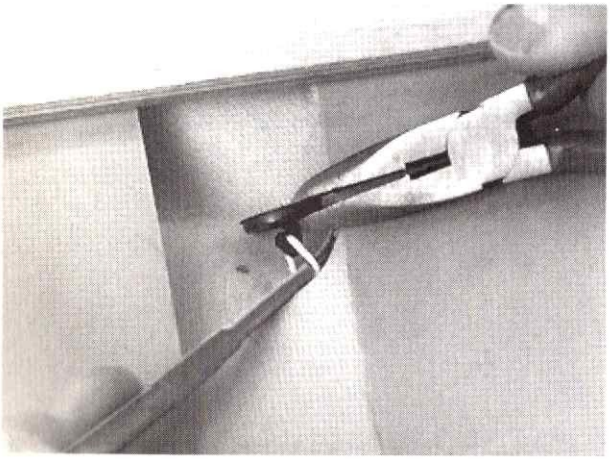

S8501231

Lift up securing unit.
Press down upholstery with a screwdriver.
Unhook.

AC B5

Removing upholstery

Lift upholstery over control panel. Leave control panel in position.

Pull off upholstery.

Remove dowel.

AC B6

Removing heater pad

S8501226

The heater pad is bonded to the seat cushion and secured at the front with two staples.

Cut off staples and pull off heater pad.

AC B7

Installing heater pad

Bond a new heater pad to the seat.

Install staples to front edge.

Hint: The damaged heater pad need not be removed. A new one can be bonded over the old one.
This can only be done once. Three pads must not be bonded on top of each other.

AC B8

Installing upholstery

Position upholstery.

Start clamping at the middle of the seat cushion.

Fold upholstery over control panel. Press in control panel as far as it will go.

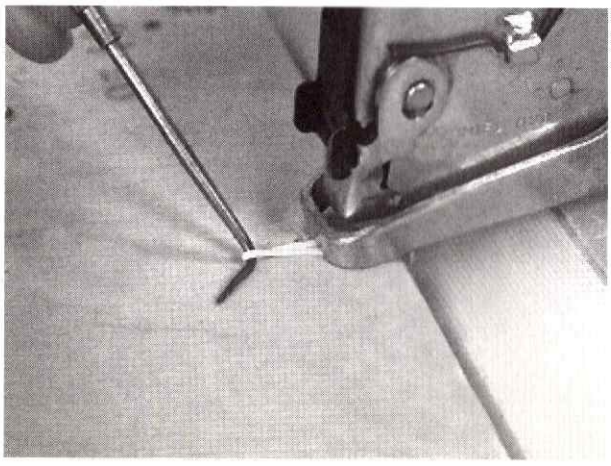

S8501227

Install retaining straps and secure to wooden frame.
Use a staple gun or tacks.
Stretch upholstery and secure with a staple gun or tacks.

Hint: Avoid folds or deformation in the upholstery.

AC C. Replacing backrest cushion upholstery and heater pad element

Replacing backrest cushion upholstery and heater pad element

AC C1

Removing upholstery

Place backrest cushion on a workbench.

Remove the upholstery from the wooden frame and cut off staples and remove securing pins.

Remove brackets holding the backrest cushion to the back plate. (Two M6 screws)

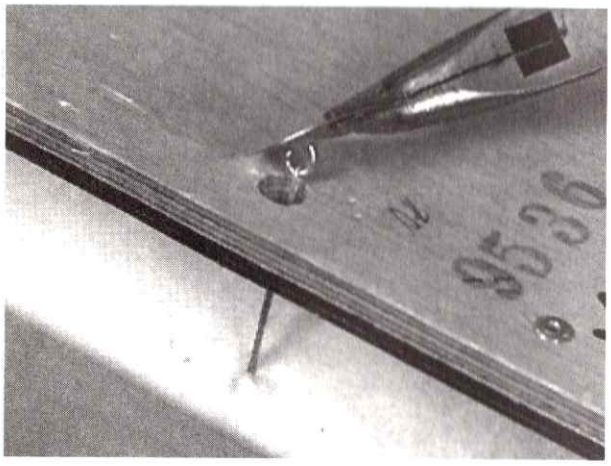

S8501224

Lift metal washers from frame with pliers.
Unhook metal washers.
Unhook rubber bands from upholstery.
Pull off upholstery.

AC C2

Removing heater pad

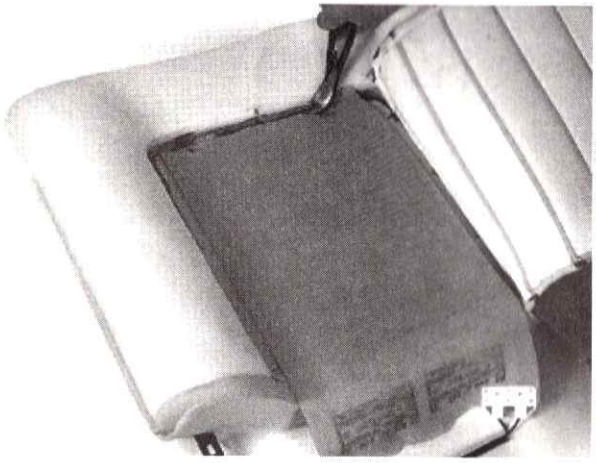

S8501222

The heater pad is bonded to the backrest cushion and secured at the top with two staples.
Cut off staples and carefully pull off heater pad.

AC C3

Installing heater pad

Bond a new heater pad to the seat.

Install staples at top.

Hint: The damaged heater pad need not be removed. A new one can be bonded over the old one.
This can only be done once. Three pads must not be bonded on top of each other.

AC C4

Installing upholstery

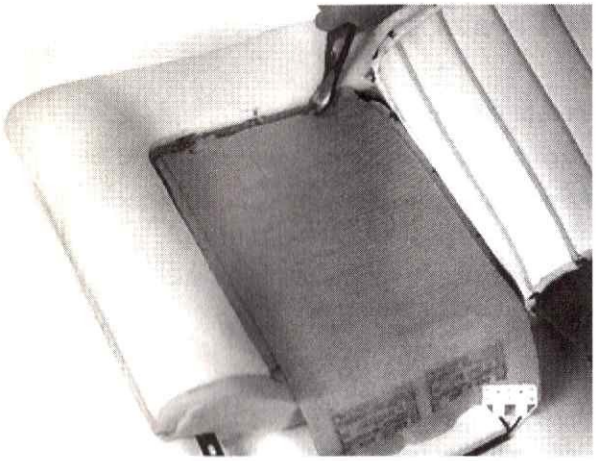

SS8501225

Prepare new upholstery with new retaining straps and new dowels.

Position upholstery.

Start at the middle of the backrest.

Install clamps.

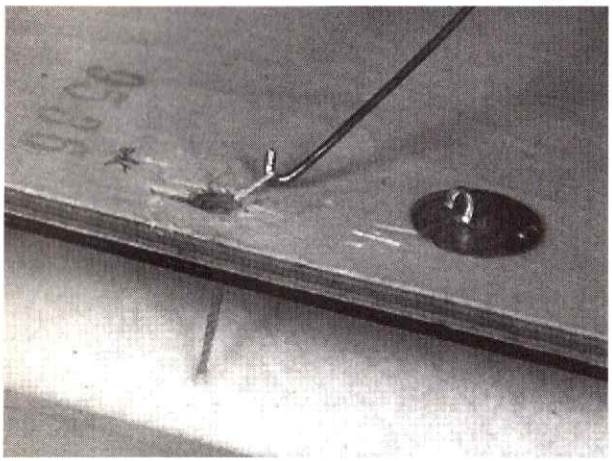

S8501223

Install retaining straps:
Use a bent welding rod to pull up the straps through the wooden frame.
Hook on metal washer.
Pull on upholstery, avoid folds.
Secure with a staple gun or tacks.

AC D. Replacing gear housing and cable

Replacing gear housing and cable

AC D1

Removing seat base from floor

Undo sill trim panel.

Fold up floor carpet and insulation.

Remove seat base from floor at the front.

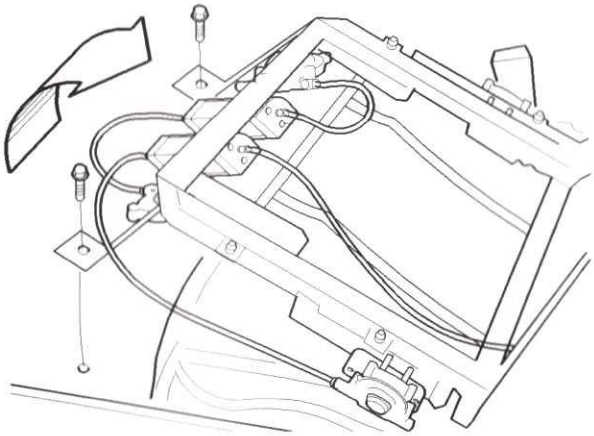

A8501194

Remove seat base from floor at the rear.

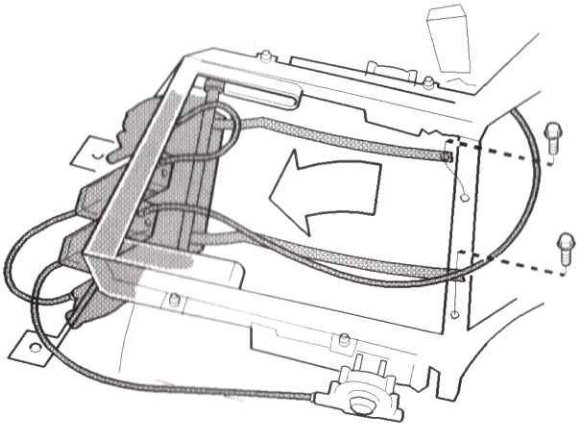

A8501198

AC D2

Removing electric motor

Remove electric motor from bracket.
Pull out cable.

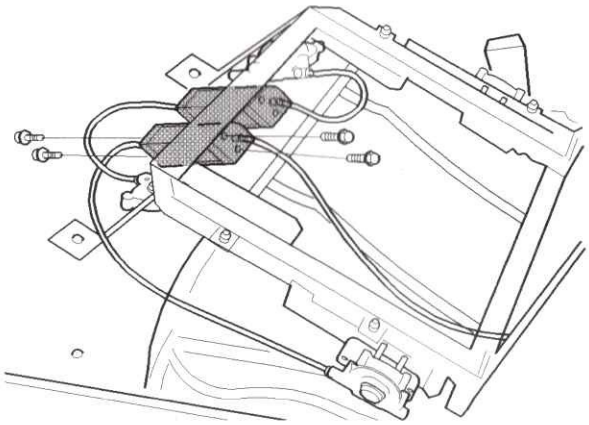

A8501195

AC D3

Removing/disassembling gear housing

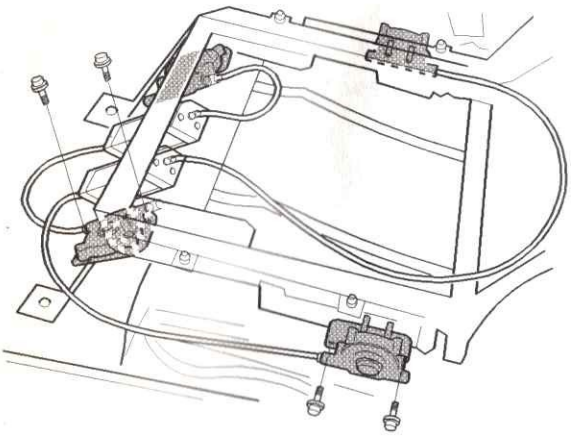

A8501196

Remove gear housing from seat frame. (Two screw for each gear housing.)

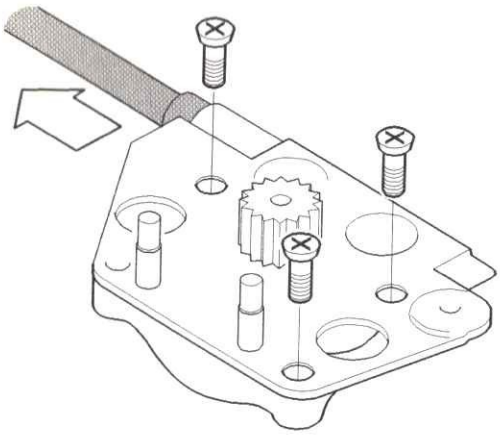

A8501197

Remove gear housing cover.
Lift out cable.

AC D4

Installing gear housing/seat base

Press cable into gear housing. Screw cover into place.

Screw gear housing onto seat frame.

Note! The gear housing does not need to be adjusted.

Press cable into electric motor.

Secure electric motor to seat base.

Screw into place.

Fold back carpet.

Install sill trim panel.

Group 87 Climate control

AD. Rear climate control unit and coolbox, Executive

AD A. Rear climate control unit

AD A1

Important information

Warning! Before starting work on the climate control system, See other manual: Safety instructions when handling refrigerant
(Service Manual Section 8(87) Climate control, 700/900).

Note! The rear climate control unit is integrated with that of car's ordinary climate control system.
The system is drained via the ordinary draining and filling valve.

AD A2

Rear climate control unit

Removing

Remove cover.

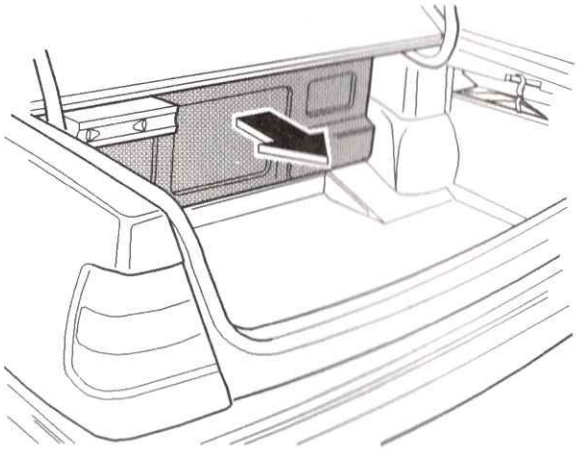

A8501660

Drain the system of refrigerant, see **AD A1**.

Remove:

- two pipes (1).
- resistor and bracket (2), two screws.
- two connectors. (3).
- four nuts (4).

Note! Leave the nuts in place.

- climate control unit from bracket.

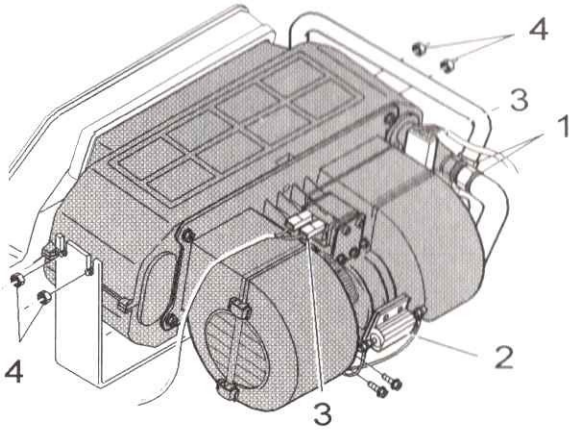

A8702612

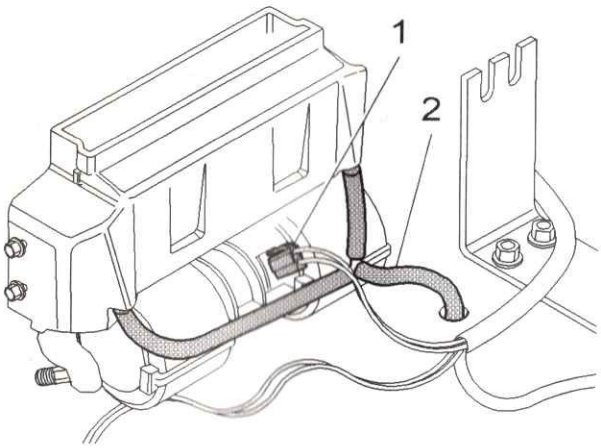

A8702613

Remove:

- connector (1).
- drain hose (2).
- climate control unit from cargo compartment.

Installing

> **Note!** Use new O-rings.
> Tightening torque: **25 Nm** for inlet and outlet pipes.

Install in reverse order.

AD A3

Replacing blower fan motor in cargo compartment

> **Note!** The air conditioning unit need not be drained to replace the blower fan motor.

Removing

Remove:

- temperature sensor with bracket (1), two screws.
- resistor (2) with bracket, two screws.
- 4 screws. (3).
- four side clips. (4).
- motor with half the cover (5).

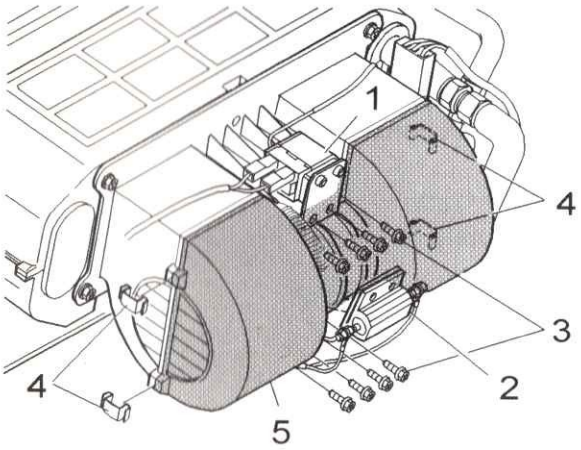

A8702614

- connector (6).
- drain hose (7).
- motor with fan (8) from cover.

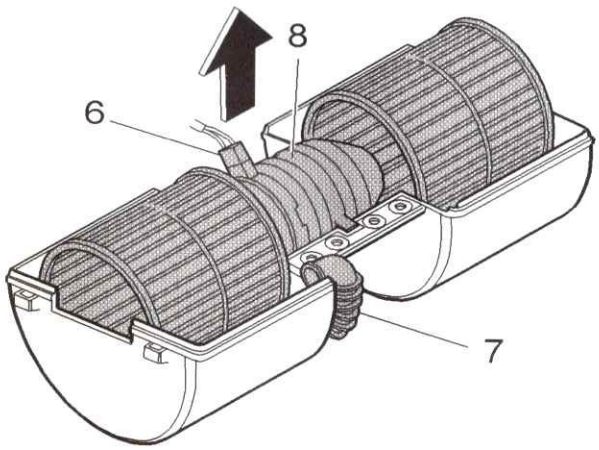

A8702616

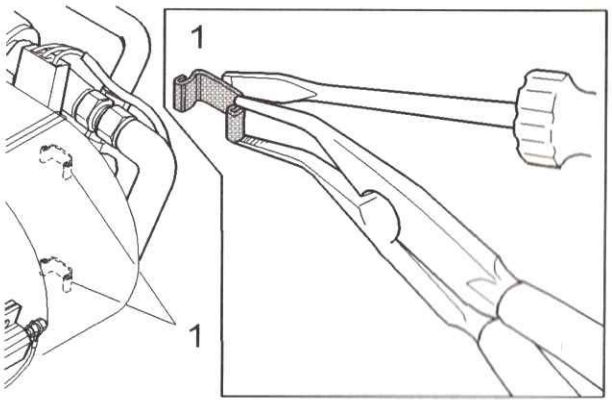

A8702651

Installing

Note! A tool may be required to install the right-hand side clips.

Install in reverse order.

AD A4

Evaporator and temperature sensor

Removing

Drain the system of refrigerant, see **AD A1**.

Remove:

- climate control unit according to **AD A2**.
- temperature sensor and bracket, two screws (1).
- blower fan motor with cover, five screws (2).
- six clips. (3)
- seal (4).
- 2 screws. (5).
- cover.

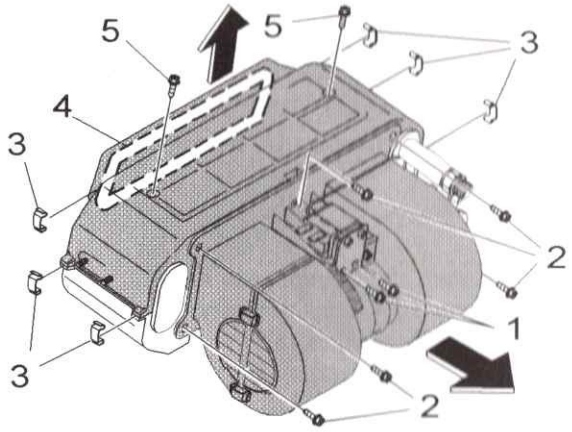

A8702650

- capillary pipe and temperature sensor (6).
- evaporator from cover.
- rubber seal (7).

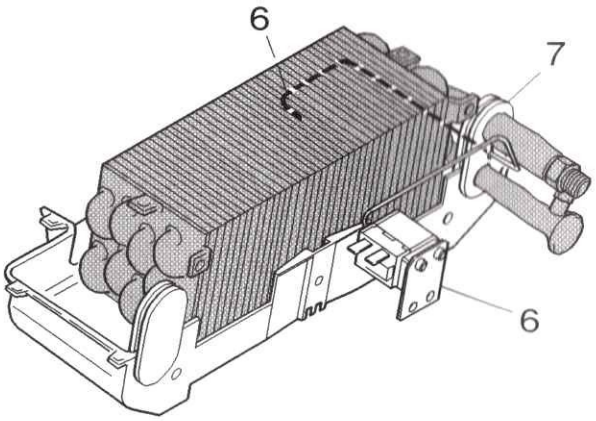

A8702660

Installing

Install in reverse order.

AD A5

Rear climate control unit solenoid valve

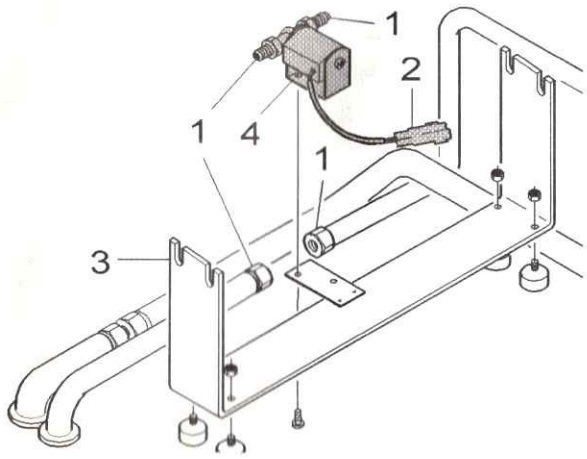

A8702632

Removing

Drain the system of refrigerant, see **AD A1**.

Remove:

- climate control unit according to **AD A2**.
- pipe connectors from solenoid valve (1).
- connector (2).
- bracket (3).
- solenoid valve from bracket (4).

Installing

> **Note!** New O-rings on pipe connector
> Tightening torque: **25 Nm** for pipe connector

Install in reverse order.

AD A6

Inlet/outlet pipes cargo compartment - evaporator

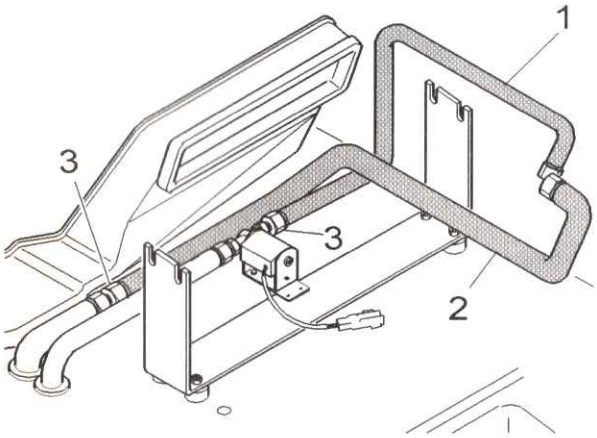

A8702633

Removing

Drain the system of refrigerant, see **AD A1**.
Remove climate control unit according to **AD A2**.
Slacken off pipe connectors (3).
Remove pipe (1) and/or (2).

Installing

> **Note!** New O-rings on pipe connectors.
> Tightening torque: **25 Nm** for inlet and outlet pipes (1) or (2).

Install in reverse order.

AD A7

Inlet/outlet pipes under car - cargo compartment

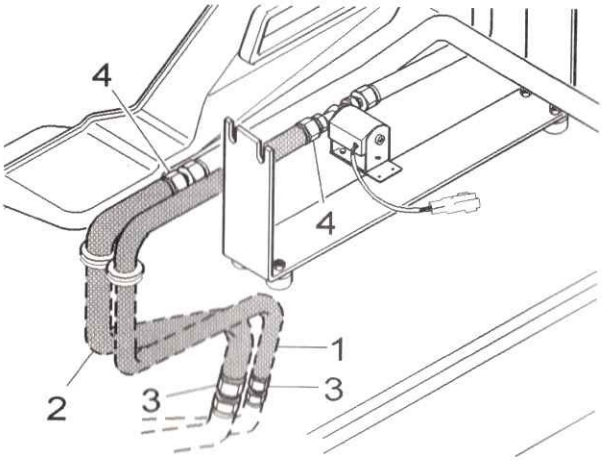

A8702634

Removing

Drain the system of refrigerant, see **AD A1**.
Raise the car.
Remove heat-shrink tubing over pipe connectors (3).
Slacken off pipe connectors (3) under car.
Lower the car.
Remove coolbox according to AD B. *Rear coolbox* page 28.
Remove climate control unit according to **AD A2**.

> **Note!** The climate control unit need only be removed when removing the inlet pipe (1).

Slacken off pipe connectors (4).
Remove pipes (1) or (2).

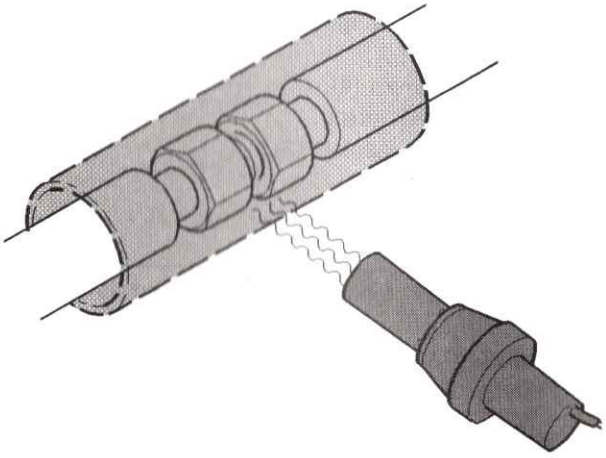
A8702640

Installing

> **Note!** Use new O-rings.
> Tightening torque: **25 Nm** for inlet and outlet pipes.
> Heat-shrink tubing over pipe connectors under car.

Install in reverse order.

AD A8

Inlet/outlet pipes rear - under car

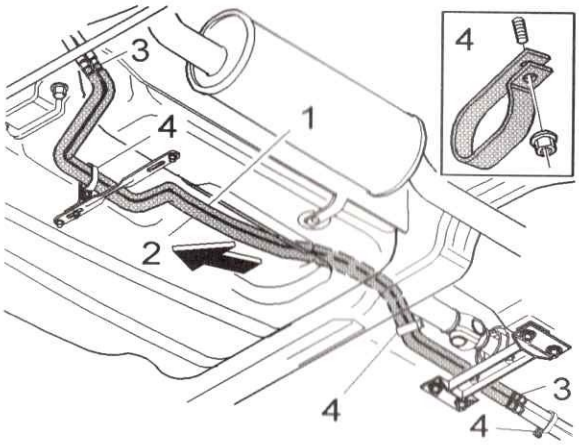

A8702635

Removing

Drain the system of refrigerant, see **AD A1**.
Remove three pipe clamps. (4).
Remove heat-shrink tubing.
Slacken off pipe connectors (3).

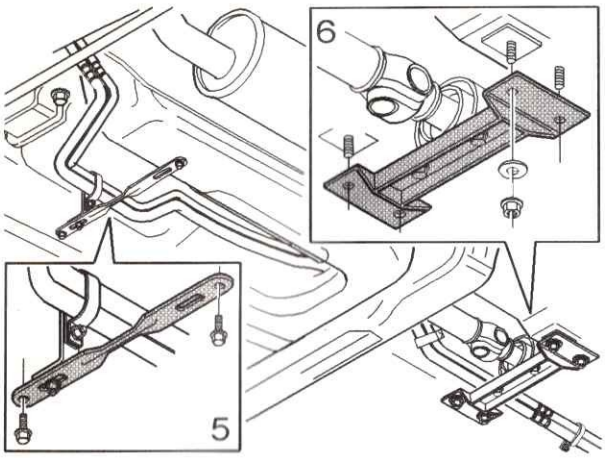

A8702636

Slacken off propeller shaft mounting bracket (6).
Remove stay with clamp, two screws (5).
Remove pipes (1) or (2) backward.

Installing

> **Note!** Heat-shrink tubing over pipe connectors under car.
> Use new O-rings.
> Tightening torque: **25 Nm** for inlet and outlet pipes.

Install in reverse order.

AD A9

Inlet/outlet pipes front - under car

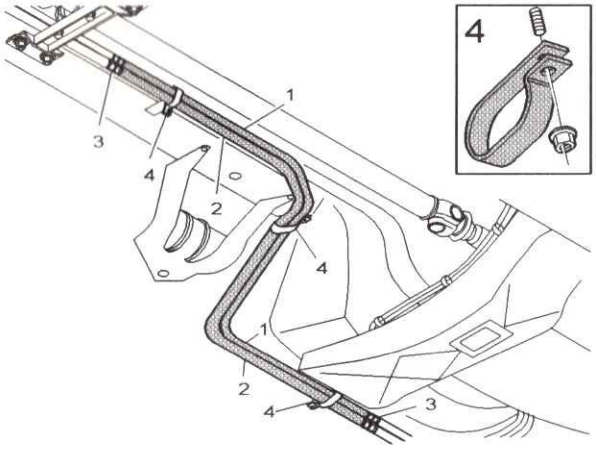

A8702637

Removing

Drain the system of refrigerant, see **AD A1**.
Raise the car.
Remove three clamps. (4).
Remove heat-shrink tubing.
Slacken off pipe connectors (3).
Remove pipes (1) or (2).

Installing

> **Note!** Heat-shrink tubing over pipe connectors under car.
> Use new O-rings.
> Tightening torque: **25 Nm** for pipe connectors.

Install in reverse order.

ADA10

Inlet pipe/hose from connector pipe by the member - under car, right-hand drive

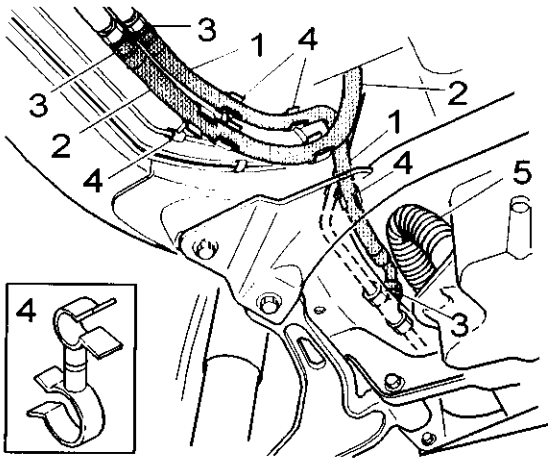

A8702639

Removing

Drain the system of refrigerant, see **AD A1**.
Raise the car.
Lift air pre-heating pipe (5) out of the way.
Disconnect pipe connector (3) from connector pipe.
Remove pipe from three pipe holders. (4).
Remove heat-shrink tubing.
Slacken off pipe connector (3).
Remove hose (1).

Note! Routing hose.

Installing

Note! Heat-shrink tubing over pipe connector under car.
Use new O-rings.
Tightening torque: **25 Nm** for connector pipe and pipe connector under car.

Install in reverse order.

ADA11

Outlet pipe/hose connector pipe - under car, right-hand drive

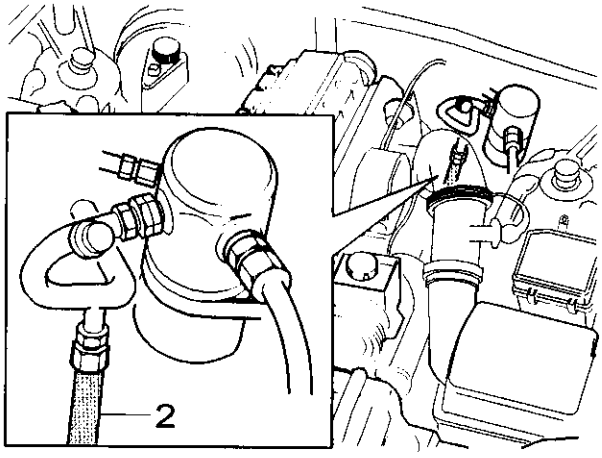

A8702644

Removing

Drain the system of refrigerant, see **AD A1**.
Open the hood.
Disconnect pipe connector from connector pipe (2).
Raise the car.

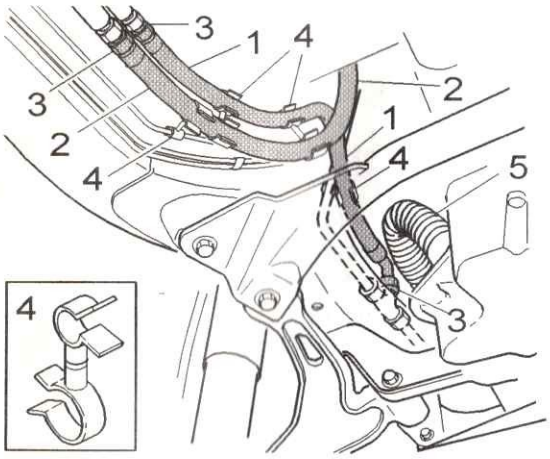

A8702639

Remove pipe from three pipe holders. (4).
Remove heat-shrink tubing.
Slacken off pipe connectors (3).
Remove pipe (2).

Note! Routing pipe.

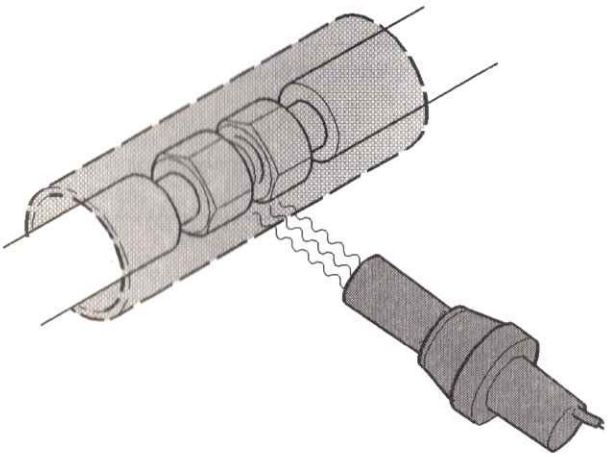

A8702640

Installing

Note! Heat-shrink tubing over pipe connector under car.
Use new O-rings.
Tightening torque: **25 Nm** for connector pipe and for pipe connector under car.

Install in reverse order.

AD A12

Inlet/outlet pipes engine compartment - under car, left-hand drive

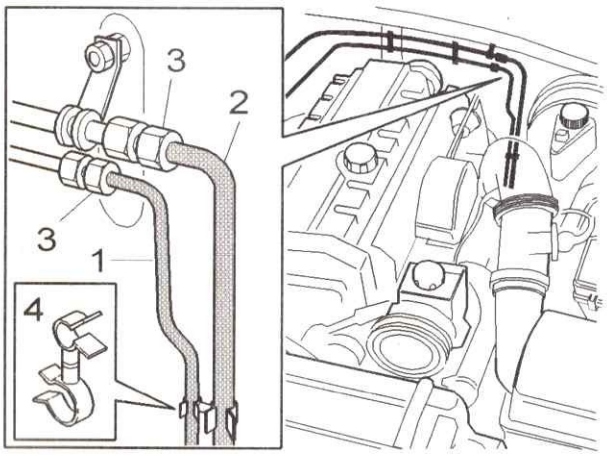

A8702641

Removing

Drain the system of refrigerant, see **AD A1**.
Open the hood.
Remove pipe connector in engine compartment (3).
Slacken off pipe clamp (4).

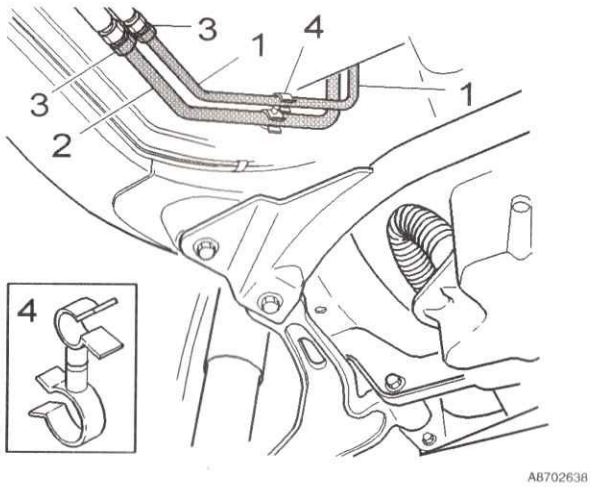

Remove heat-shrink tubing.
Remove pipe connector under car (3).
Slacken off pipe clamp (4).
Remove pipe (1) and/or (2).

Installing

> **Note!** Heat-shrink tubing over pipe connector.
> Use new O-rings.
> Tightening torque: **25 Nm** for pipe connectors.

Install in reverse order.

AD A13

Inlet pipe from connector pipe by member - engine compartment, left-hand drive

Removing

Drain the system of refrigerant, see **AD A1**.
Disconnect inlet pipe (1) by pipe connector (3).
Slacken off pipe clamps (4).

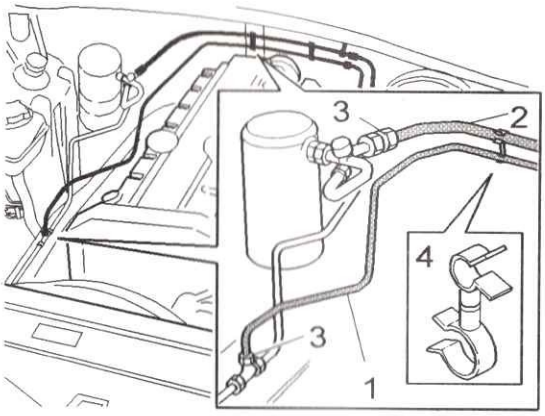

Disconnect inlet pipe (1) by pipe connector (3).
Slacken off pipe clamps (4).
Remove pipe.

Installing

> **Note!** Use new O-rings.
> Tightening torque: **25 Nm** for connector pipe and firewall pipe connector.

Install in reverse order.

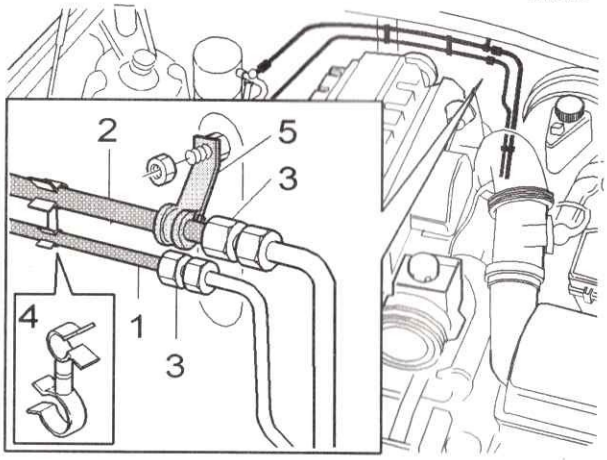

AD A14

Outlet pipe connector pipe - engine compartment, left-hand drive

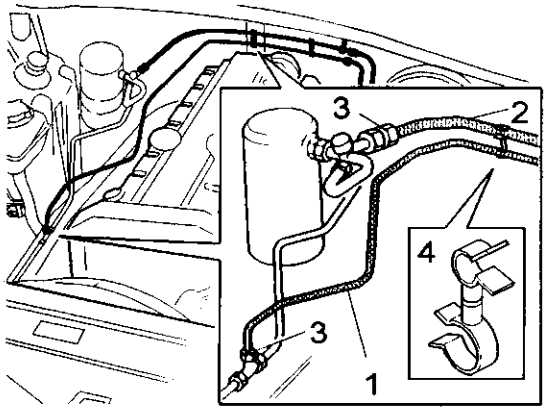

A8702642

Removing

Drain the system of refrigerant, see **AD A1**.
Disconnect pipe connector from connector pipe (3).
Slacken off pipe clamps (4).

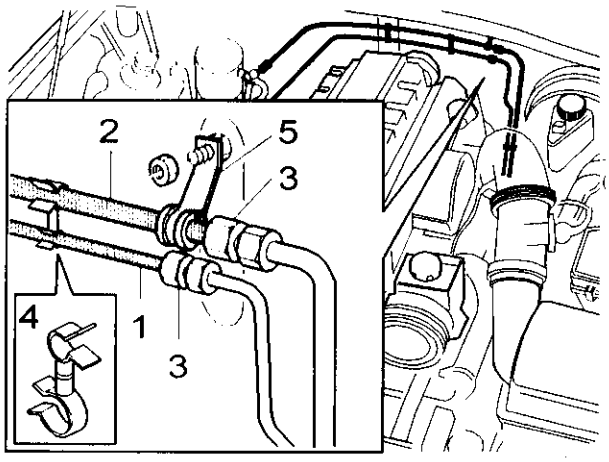

A8702643

Disconnect pipe connector from connector pipe in engine compartment (3).
Slacken off pipe clamp by heater hoses (5).
Remove the pipe.

Installing

> **Note!** Use new O-rings.
> Tightening torque: **25 Nm** for connector pipe and pipe connector.

Install in reverse order.

AD A15

Air duct climate control unit - passenger compartment

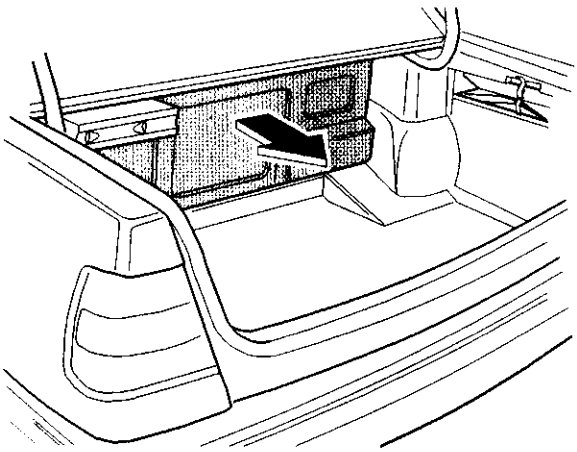

A8501660

Drain the climate control system of refrigerant, according to See other manual: Overview (Service Manual Section 8 (87) Climate control, 700/900).

Remove:

- cover in cargo compartment.
- climate control unit according to **AD A2**.
- coolbox according to AD B. *Rear coolbox* page 28.

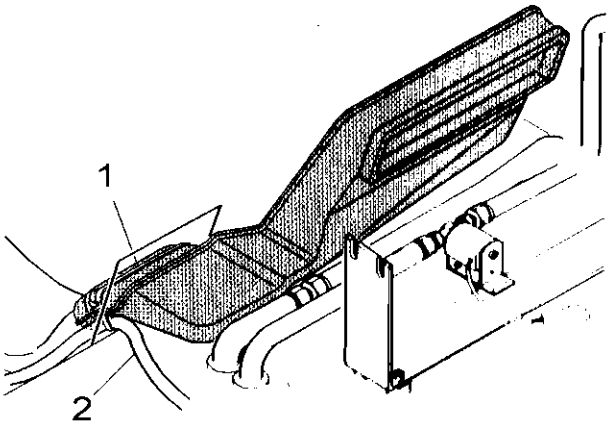

A8702654

Removing

Remove:

- seat cushions and backrest cushion according to ACA. *Replacing rear seat seat cushion/backrest cushion and center console* page 6.
- rear center armrest
- tie strap (1) holding cable harness (2) by the air duct.
- air duct.

Installing

Note! Use new O-rings. Tightening torque: **25 Nm** for inlet and outlet pipes.

Install in reverse order.

ADA16

Rear air duct for rear center console

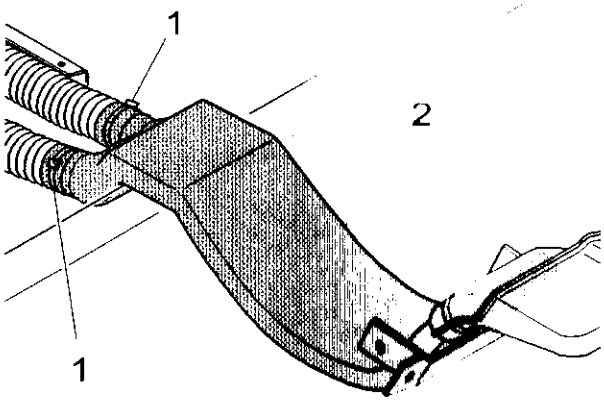

A8702655

Removing

Remove rear center console according to ABA. *Rear center console* page 3.
Remove tie straps (1).
Remove air duct (2).

Installing

Install in reverse order.

ADA17

Front air duct for rear center console

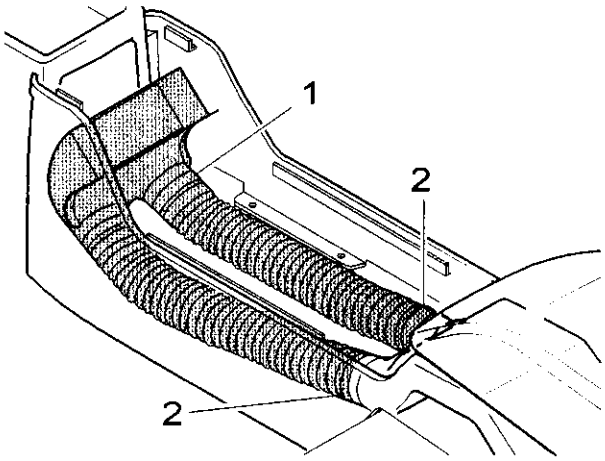

A8702656

Removing

Remove:

- Remove panel according to ABA. *Rear center console* page 3.
- tie straps (2).
- air duct (1).

Installing

Install in reverse order.

AD B. Rear coolbox

AD B1

Coolbox

Removing

Remove cover.

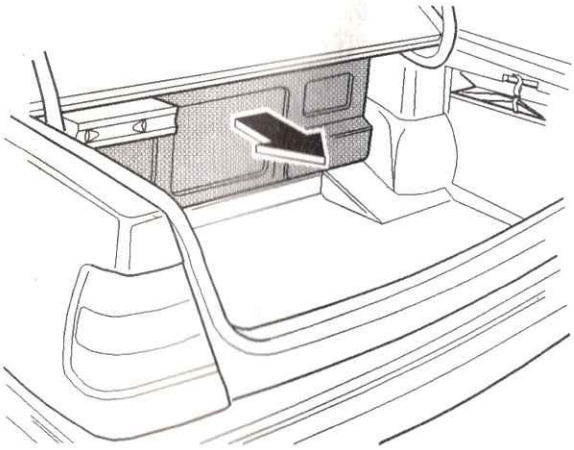

A8501660

Remove screws and nuts.
Disconnect connector (1).
Remove coolbox.

Installing

Install in reverse order.

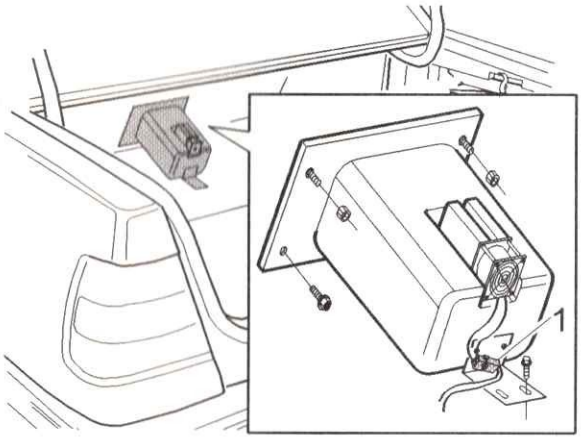

A8900930

Group 88 Interior trim

AE. Electrical sun blind, Executive

AE A. Electrical sun blind

AE A1

Sun blind

Removing

Open cover in cargo compartment.

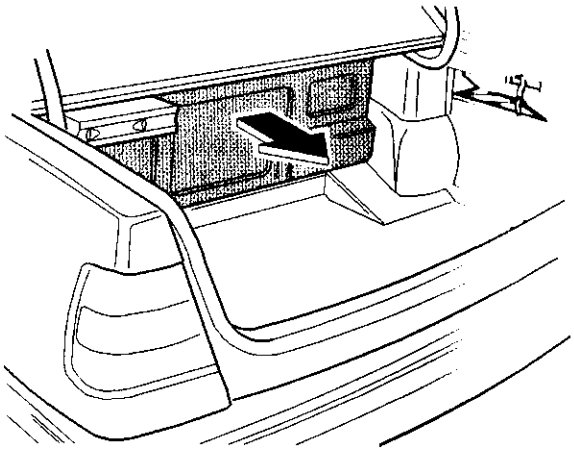

A8501660

Remove bracket screw (1).
Take out and disconnect motor connector (2).
Remove seat and backrest cushions according to AC A. *Replacing rear seat seat cushion/backrest cushion and center console* page 6.

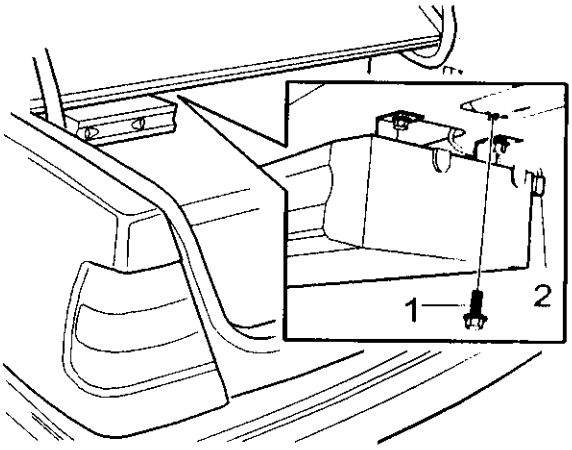

A8501661

Remove head restraint.
Remove center cushion nuts (1).

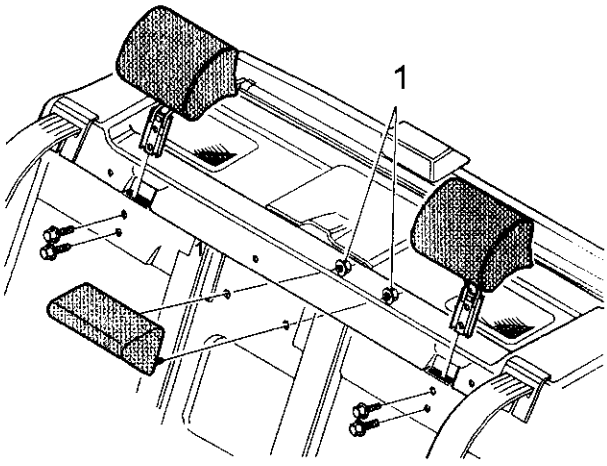

A8501690

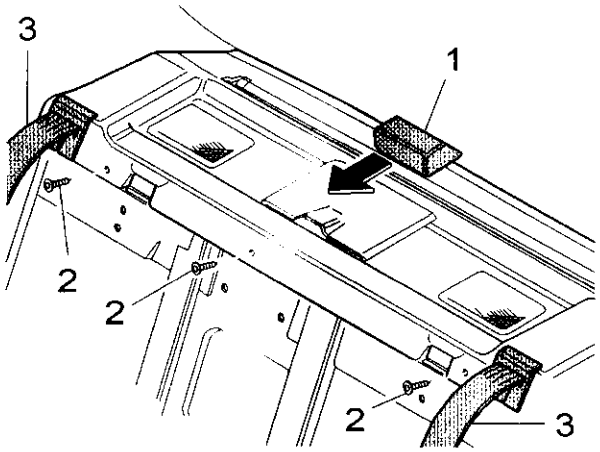

A8501691

Remove brake light (1) by pulling it forward.
Remove parcel shelf screws (2).
Pull seat belts down through their tracks (3).

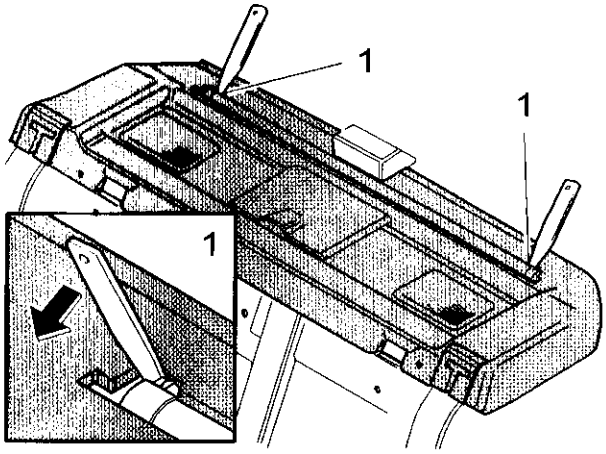

A8501692

Remove parcel shelf using a weatherstrip tool (1).

AE A2

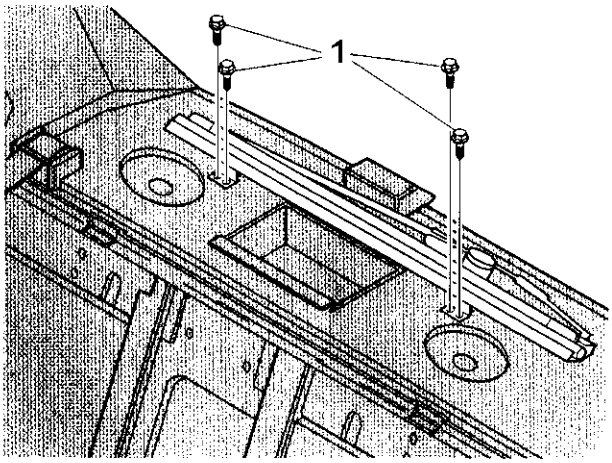

A8501693

Remove screws (1) and then the sun blind.

Installing

Install in reverse order.

Comments

To
VOLVO CAR CORPORATION
Aftersales
Dept. 91310 SAA1
S-405 08 GÖTEBORG

Telefax +46 31 59 23 53

From
.....
.....
.....

Publication:.....
.....

Section:..... Page ..... TP No.....

Suggestion/Reason:

.....
.....
.....
.....
.....
.....
.....

Date.....
.....

If you have any suggestions or comments about this manual make a copy of this page, write down your comments and send to us.

TP 8716031
1000.04.97
English

Printed in Sweden, Graphic Systems AB, Gbg 1997.31222